BUDDERFACE

© LECTRIC-FX.COM

Seventies style silicon fuzz with mids control

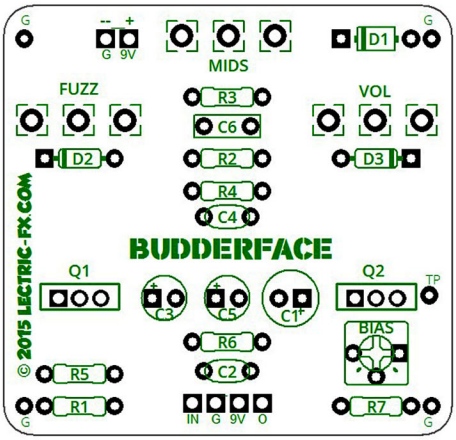

Reference	Value	Reference	Value
R1	1M	D1	1n4001
R2	1k	D2	1n914
R3	220R	D3	BAT85
R4	33k		
R5	100k	Q1	BD1396STU
R6	1k	Q2	BD13910STU
R7	1M		
		VOL	250KA
C1	100uF	FUZZ	1KC
C2	10p	MIDS	1KB
C3	22uF	BIAS	5K tr
C4	22p		
C5	22uF		
C6	100n		

R1 is a pull-down resistor that shouldn't really be used unless there is audible popping when engaging the effect. Try the effect without it, and if you don't need it, great. If there is a pop, use the smallest resistor you can get away with. A socket would probably be a good idea in this spot. R7 can also be omitted if desired.

C4 can be 10p if desired with very little discernable change in sound.

D3 can just as easily be a germanium diode such as 1n270, or a silicon 1n60P.

The transistors are available from mouser, digikey and possibly other outlets. The 6 & 10 in the suffix is important if you want to use these gains. the BD1396STU has a gain of ~70, while the BD13910STU is ~110. These consistent gains allow for a very easy build, and much of the silicon fizziness in this type of circuit is lessened.
Naturally, other transistors can be used for a more aggresive sound. The pin order is ECB. You could use the BD139's or 2SC3807 from Tayda, both of which seem to have gains of around 300.

Use your DMM & test point TP to adjust the voltage (using BIAS trimmer) to around 4.5V, or to taste. The mids pot will change the bias voltage some, so I set it to the halfway point.

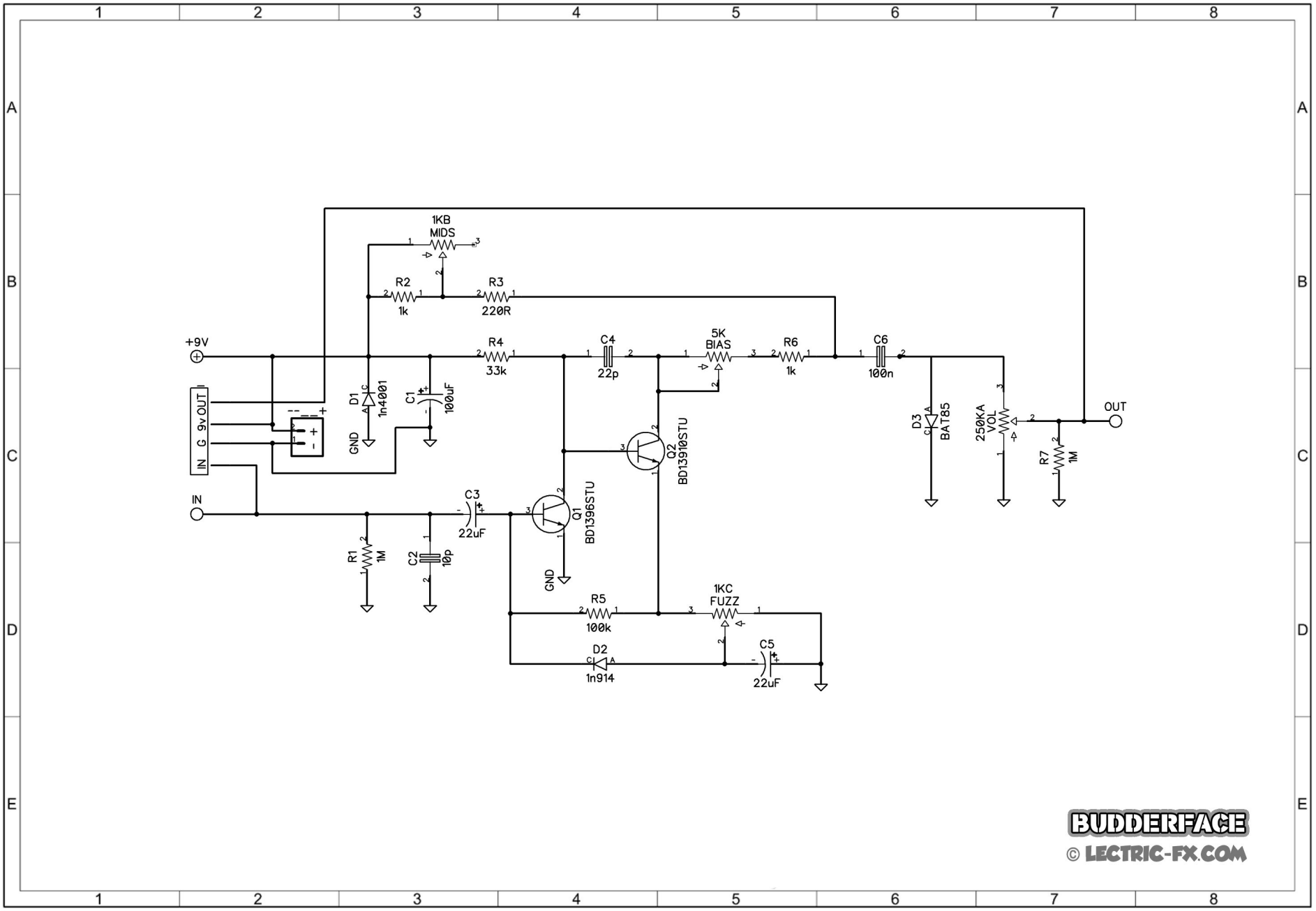
1KB
MIDS
R2
1k
R3
220R
+9V
R4
33k
C4
22p
5K
BIAS
R6
1k
C6
100n
D1
1n4001
C1
100uF
GND
IN G 9v OUT
IN
C3
22uF
Q1
BD1396STU
Q2
BD13910STU
D3
BAT85
250KA
VOL
R7
1M
OUT
R1
1M
C2
10p
GND
R5
100k
1KC
FUZZ
D2
1n914
C5
22uF
BUDDERFACE
© LECTRIC-FX.COM

1590B Drill Guide

Untested