SH3 V.1.0

SpaceHarp 3 Phaser

© 2021 LECTRIC-FX.COM

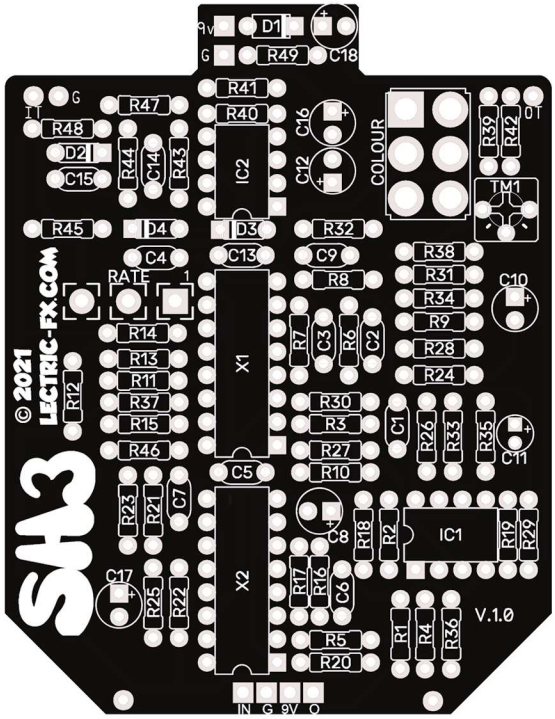

Enter a new phase with the Space Harp 3 (Small Stone V3 ™)!

What sets it apart from the V1 & 2? The original Small Stone designs used a transistor-based input stage, OTA based oscillator and CA3094 (EH1048) chips for the phase stages with passive output mixing.

This version (The V3) was a completely new design produced using the new (at the time) LM13600 OTA for the phase stages and an op amp oscillator, input & output stage.

The circuit took advantage of the lower distortion available in the 13600 through use of its internal anti-parallel diodes and also shifted the phase range using 3n3 caps in place of the usual 6n8 found in the other small stones variants for a slightly more balanced sound.

One issue with cloning the V3 has always been its use of a C2M pot for the rate control, many places suggest simply double the LFO capacitor and using a C1M pot, but this method loses some of the rate range of the original. We have overcome this by using a voltage divider in the LFO to achieve the same rate range of the original C2M pot while using the far easier to obtain C1M value. Additionally, we have also turned the original output buffer in to an adjustable full bandwidth gain stage (adjusted via the trimmer) to account for and remedy the classic small stone volume drop.

Audio Op Amp Choice (IC1)
Due to the unique biasing arrangement of the circuit, many alternative op amps may not function correctly or at all.
We have tried TL072 & NE5532, neither of which would function so we recommend sticking with the stated LM358.

SH3 V.1.0

SpaceHarp 3 Phaser

© 2021 LECTRIC-FX.COM

B.O.M

Resistor #	Value	Resistor #	Value	Switch Name	Part
R1	1M	R35	1k	COLOUR	DPDT
R2	100k	R36	100k	Diode #	Part
R3	1M	R37	12k	D1	1n5817
R4	18k	R38	4k7	D2	1n4148
R5	15k	R39	1k8	D3	1n4148
R6	27k	R40	82k	D4	1n4148
R7	47k	R41	160k	IC #	Part
R8	27k	R42	56k	IC1	LM358
R9	10k	R43	47k	IC2	LM358
R10	10k	R44	27k	X1	LM13700
R11	27k	R45	56k	X2	LM13700
R12	47k	R46	100R	Pot Name	Value
R13	27k	R47	27k	RATE	1MC
R14	10k	R48	27k	Trimmer #	Value
R15	10k	R49	47R	TM1	100k
R16	27k	Cap #	Value		
R17	47k	C1	6n8		
R18	27k	C2	3n3		
R19	10k	C3	47n ceramic		
R20	10k	C4	3n3		
R21	27k	C5	3n3		
R22	47k	C6	47n ceramic		
R23	27k	C7	3n3		
R24	10k	C8	33uF		
R25	10k	C9	6n8		
R26	3k9	C10	33uF		
R27	27k	C11	1u e		
R28	30k	C12	33uF		
R29	15k	C13	47n		
R30	3k3	C14	10n		
R31	4k7	C15	47n		
R32	68k	C16	10u		
R33	270k	C17	10u		
R34	47k	C18	33uF		

Resistor/Cap QTYs

Totals	Values	Totals	Values
1	47R	4	3n3
1	100R	2	6n8
1	1k	1	10n
1	1k8	2	47n ceramic
1	3k3	2	47n
1	3k9	1	1uF electro
2	4k7	2	10uF
8	10k	4	33uF
1	12k		
2	15k		
1	18k		
12	27k		
1	30k		
6	47k		
2	56k		
1	68k		
1	82k		
2	100k		
1	160k		
1	270k		
2	1M		

LM358 should be used for IC1 and 2.

Ceramic caps are recommended for C3 and 6.

Your 100k trimmer is for adjusting the output level.

D1 uses the smaller footprint for the DO-41 package, so you might consider installing it as a standing diode. I had to squeeze the leads tight to each side of the diode with pliers to make it fit!

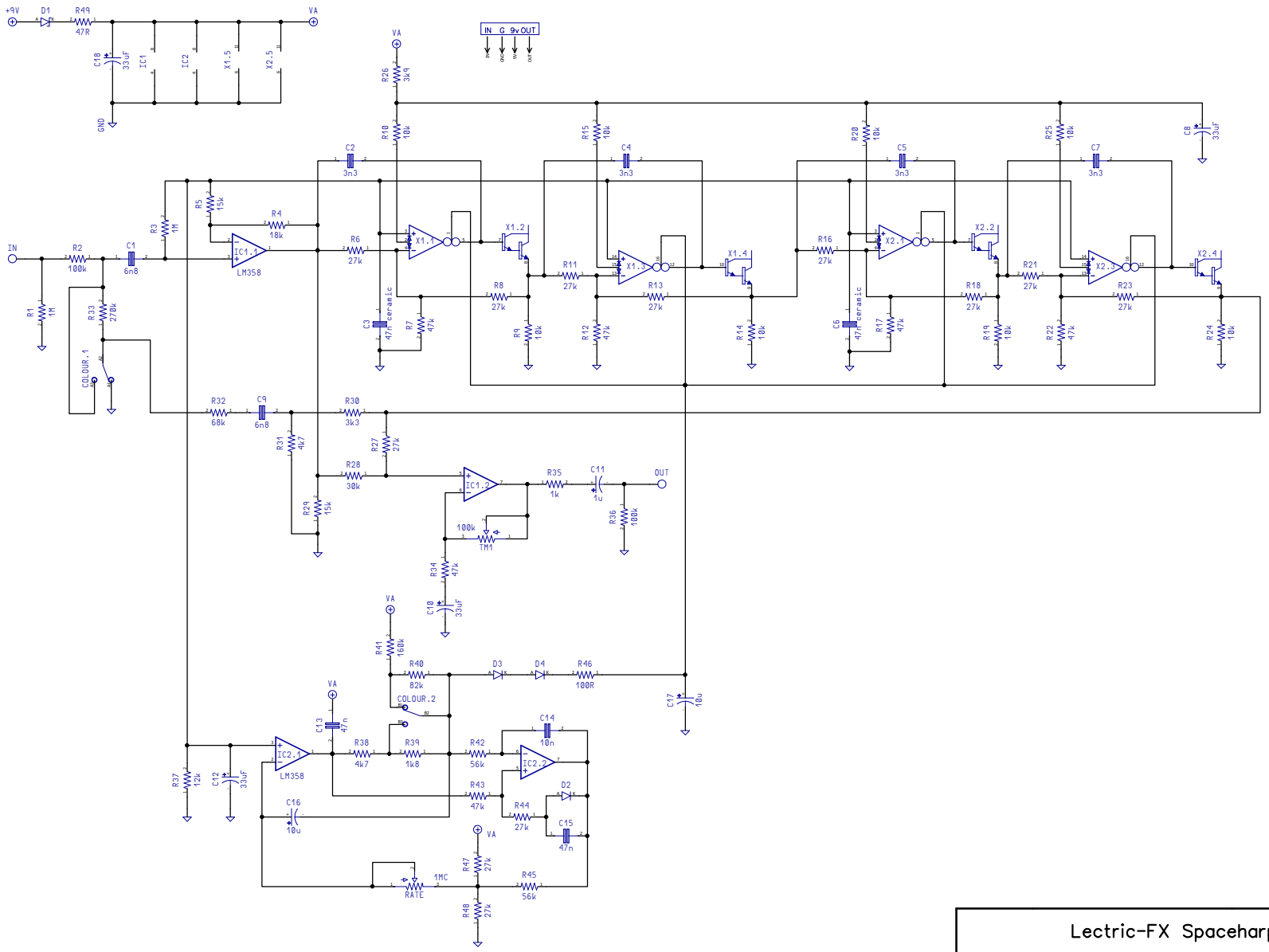

Lectric-FX Spaceharp 3		
Size A4	Number 0000001	Rev 1.1
Date: 30/07/2021		Drawn by: Habby
Filename: SH3		1 of 1

Drill Guide Suggestion (Top Mount)
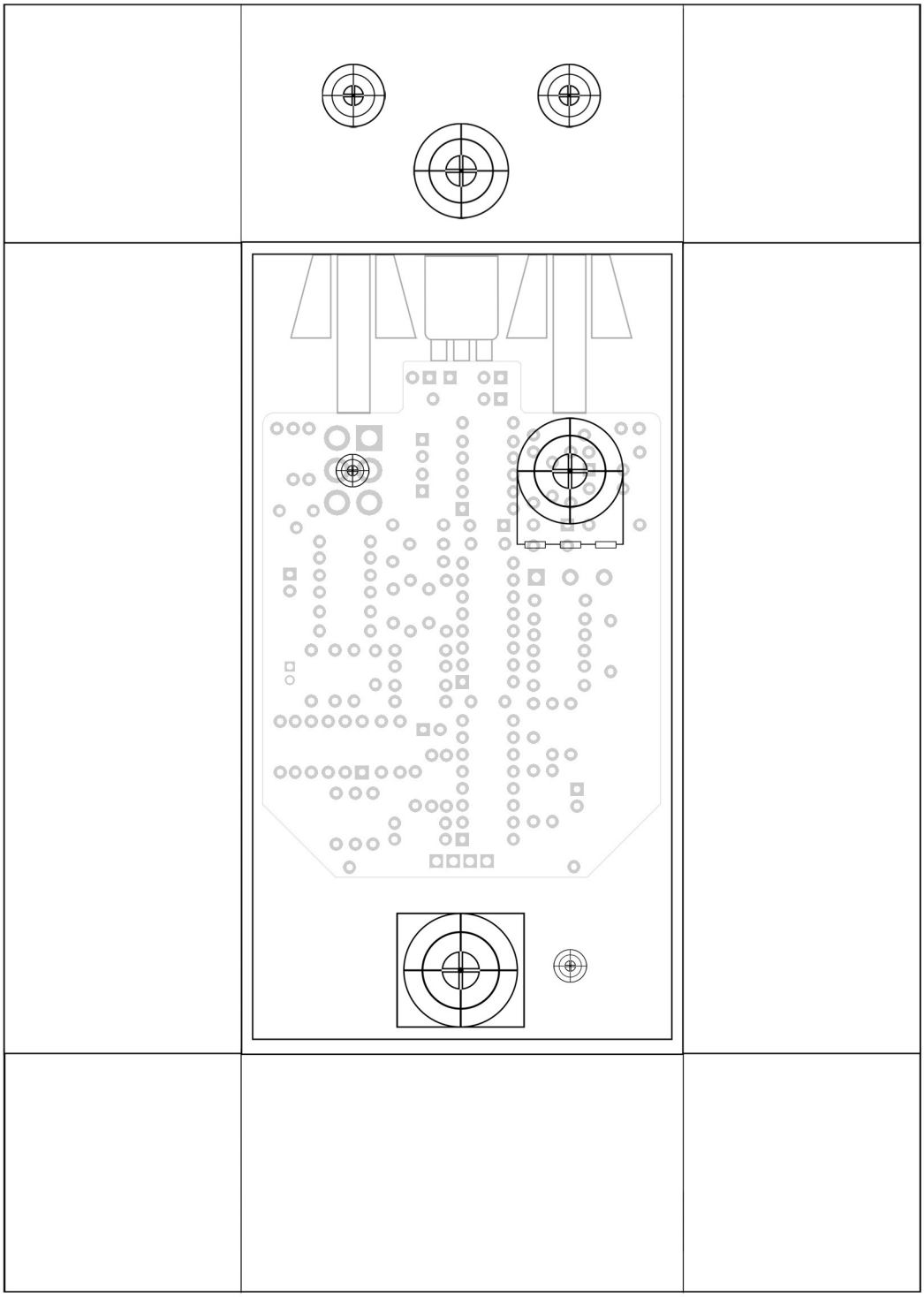
125b- Untested!